Tutorial Series

ICeGaN™ Advantage in Applications



CGD™
CAMBRIDGE GaN DEVICES

Presenter: Peter Comiskey, Director of Application Engineering
Moderator: Nare Gabrielyan, Product Marketing Manager

Tutorial Webinar Series Schedule

	Topic	Presenter	Live Date
	**Powering up the future with GaN**	Andrea Bricconi, CCO	February 9th
	**State-of-the-art architectures and future concepts in GaN technology for power electronics**	Florin Udrea, CTO	March 13th
	**ICeGaN™: Enhancing Reliability and Quality of GaN**	Zahid Ansari, VP Operations	April 27th
	**The ICeGaN™ Advantage in Applications**	Peter Comiskey, Director of Application Engineering	May 24th

Property of Cambridge GaN Devices Ltd

© 2023 CGD

Ground Rules and Instructions



Please make sure you are muted



Use the chat for comments and questions

Property of Cambridge GaN Devices Ltd

© 2023 CGD

About the Host

- Peter has more than 25 years of experience in the design & development of advanced power electronic products for high reliability & high volume applications.

- He started his career in 1993 as an Electronics Engineer developing Automotive Diagnostic Hardware products and went on to hold various senior engineering, project management & executive management roles supporting the development of high power electronic products with Automotive 1st tiers and OEMs.

- Peter leads the Cambridge GaN Devices Application Engineering team, helping customers & development partners globally successfully integrate their GaN devices into new designs. His team develop strategic reference products and evaluation hardware that demonstrate the core benefits of CGD GaN technology and support the development of future devices.

- Peter has a MEng degree in Electrical and Electronics Engineering.



Property of Cambridge GaN Devices Ltd

© 2023 CGD

Content

- Introduction to CGD & CGD Product Portfolio
- What is ICeGaN™
  - Introduction to the Device & package
- How to use ICeGaN in your Application
  - Introduction to our Application Hardware
  - Si/SiC to GaN with ICeGaN
  - ICeGaN VDD & H2 NL^3
  - ICeGaN Gate control
    - Operation in the Third Quadrant
  - ICeGaN Current-Sense
  - dV/dt Immunity and the ICeGaN Miller Clamp
- Review & Summary

Property of Cambridge GaN Devices Ltd

© 2023 CGD

Cambridge GaN Devices at a Glance

Spun-out from the Cambridge University – In Mass Production since 2022 with ICeGaN™ 650V

A fabless semiconductor company designing, developing and commercialising **energy-efficient GaN-based power devices and ICs**

Operating from
5
Locations

Supporting
20+
Leading customers

Employees
~50
> 300% growth (2019– 2023)



Knowledge

Academic excellence and industry expertise combined

Innovation

Innovative power solutions that help protect the environment

Sustainability

Eco-compatible business measures (**ESG**)

Responsability

Energy savings for reliable and sustainable electronics

Property of Cambridge GaN Devices Ltd

© 2023 CGD

ICeGaN™ Technology

Decades of Research Led to ICeGaN™

Combined System Performance, Enhanced Reliability and Robustness and Ease-of-Use

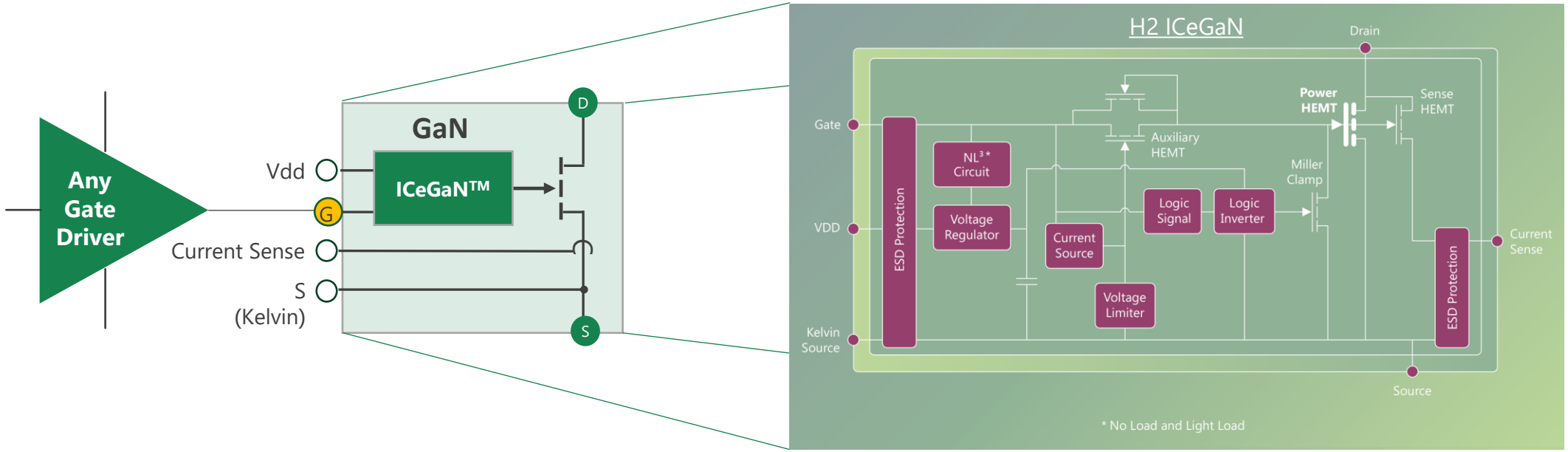

Ease-of-use ✓

System cost ✓

Scalability ✓

Gate robustness ✓

System performance ✓

1. eMode GaN with higher $V_{GS(th)}$ and extended static V_{GS} range (0-20 V) and much larger dynamic V_{GS} range
2. Internal logic & Miller clamp to ensure fast switching, high dV/dt immunity and hold-off with needing a negative V_{GS}
3. High efficiency current sense solution
4. H2 NL^3 circuit to lower current consumption when Gate is low

Property of Cambridge GaN Devices Ltd

© 2023 CGD

Introduction to the ICeGaN™ variants

Best-in-Class Robustness, Ease-of-Use & Maximised Efficiency

	PN	Type	$R_{DS(on)}$ (typ. 25°C)	Voltage Rating (V_{DS}@25 °C)	DC Current Rating (I_D@25 °C)	Peak Gate Voltage (25 °C)	Package	Features	Preferred Gate Driver	Status
ICeGaN™ H1 SERIES for applications requiring high efficiency and power density	CGD65A055S2	Single eMode	55 mOhm	650 V (750 V)	27 A	20 V	DFN 8x8	ICeGaN™ Current Sense	Any MOSFET driver	In production
	CGD65A130S2		130 mOhm		12 A					
	CGD65B130S2						DFN 5x6			
	CGD65B200S2		200 mOhm		8.5 A					
ICeGaN™ H2 SERIES for applications requiring to minimise No Load and Light Load losses	CGD65A055SH2	Single eMode	55 mOhm	650 V (750 V)	27 A	20 V	DFN 8x8	ICeGaN Current Sense NL³ Circuit	Any MOSFET driver	Coming soon
	CGD65A130SH2		130 mOhm		12 A					Available
	CGD65B130SH2						DFN 5x6			Available
	CGD65B240SH2		240 mOhm		7 A					Available

APPLICATIONS

© 2023 CGD

Property of Cambridge GaN Devices Ltd

How to use ICeGaN™ in your Application

How to use ICeGaN™ in your Application

- ICeGaN Evaluation Hardware
- From Si/SiC to GaN with ICeGaN
- ICeGaN VDD & H2 NL^3
- ICeGaN Gate control
  - Operation in the Third Quadrant
- Current-Sense
- dV/dt Immunity and the ICeGaN Miller Clamp

Property of Cambridge GaN Devices Ltd

© 2023 CGD

ICeGaN™ Evaluation Hardware

	Part Number	Evaluation Board	Topology	Devices used	Where to buy
ICeGaN™ H1 SERIES	CGD-ASYEVB00701-01	ICeGaN™ 55mΩ Half Bridge	Half Bridge	CGD65A055S2	Contact us
	CGD-ASYEVB00801-01	ICeGaN™ 130mΩ Half Bridge (8x8)	Half Bridge	CGD65A130S2	Contact us
	CGD-ASYEVB01101-01	ICeGaN™ 130mΩ Half Bridge (5x6)	Half Bridge	CGD65B130S2	Contact us
	CGD-ASYEVB00901-01	ICeGaN™ 200mΩ Half Bridge	Half Bridge	CGD65B200S2	Contact us
	CGD-ASYEVB00201-02	ICeGaN™ 65 W QR Flyback	Quasi Resonant Flyback	CGD65B200S2	Contact us
	CGD-ASYEVB00105-01	ICeGaN™ 350 W LLC	LLC DC-DC	CGD65A055S2	Contact us
	CGD-ASYINT0nn01-01	ICeGaN™ Application Interface Board	All	All	Contact us
ICeGaN™ H2 SERIES	CGD-ASYEVB02301-01	ICeGaN™ 130mΩ Half Bridge (8x8)	Half Bridge	CGD65A130SH2	Contact us
	CGD-ASYEVB02201-01	ICeGaN™ 130mΩ Half Bridge (5x6)	Half Bridge	CGD65B130SH2	Contact us
	CGD-ASYEVB01601-01	ICeGaN™ 240mΩ Half Bridge	Half Bridge	CGD65B240SH2	Contact us
	CGD-ASYEVB00201-05	ICeGaN™ 65 W QR Flyback with H2	Quasi Resonant Flyback	CGD65A240SH2	Contact us
	CGD-ASYEVB012FA-02	ICeGaN™ 350 W PFC	Totem-Pole PFC	CGD65A055SH2	Available Soon
	CGD-ASYRFD003FA-02	ICeGaN™ 65 W QRF – Reference Design	Quasi Resonant Flyback	CGD65A240SH2	Available Soon
	CGD-ASYRFD002FA-02	ICeGaN™ 350 W PFC/LLC – Reference Design	Totem-Pole PFC & Half-Bridge LLC	CGD65A055SH2	Available Soon



Property of Cambridge GaN Devices Ltd

© 2023 CGD

From Si to GaN with ICeGaN™

- Simplified QR Flyback Application circuit
- MOSFET power switch with traditional current-sense resistor

See Evaluation Board : CGD-ASYEVB00201-05

H2 ICeGaN™ 65 W QR Flyback



See Reference Design : CGD-ASYRFD003FA-02

H2 ICeGaN™ 65 W QR Flyback Reference Design

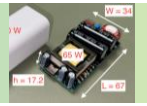

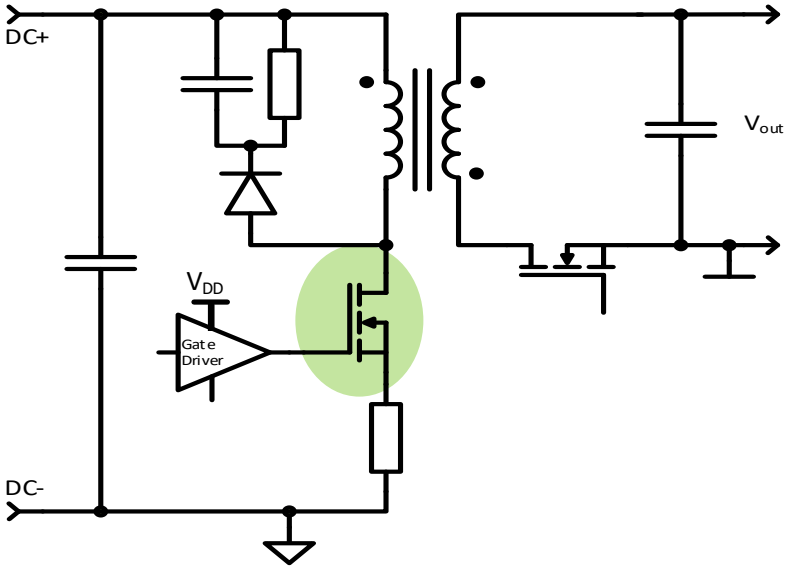

Simplified Schematic

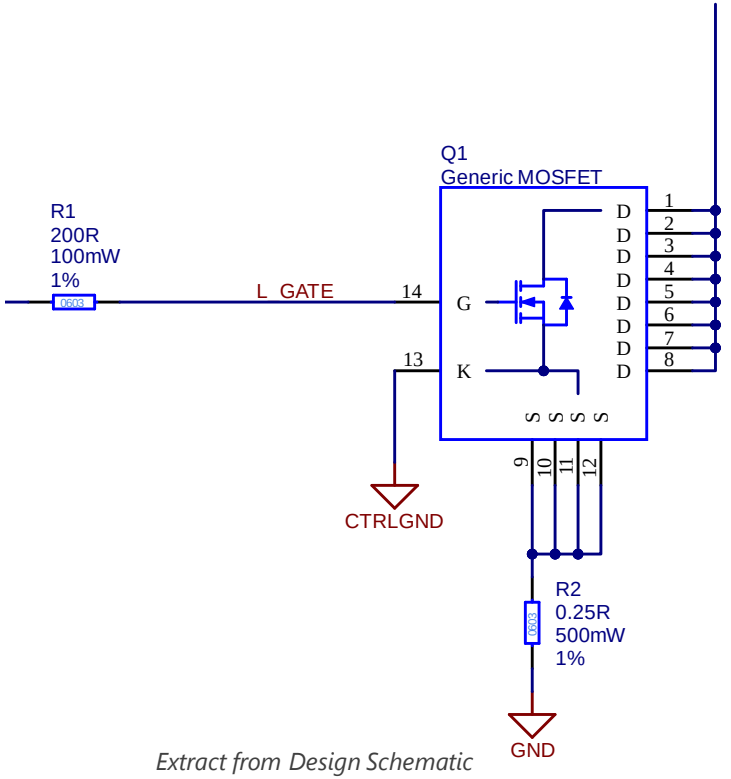

Extract from Design Schematic

© 2023 CGD
Property of Cambridge GaN Devices Ltd

From Si to GaN with ICeGaN™

- Simplified QR Flyback Application circuit
- ICeGaN power switch without traditional current-sense resistor

See Evaluation Board : CGD-ASYEVB00201-05

H2 ICeGaN™ 65 W QR Flyback



See Reference Design : CGD-ASYRFD003FA-02

H2 ICeGaN™ 65 W QR Flyback Reference Design

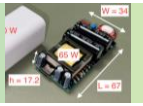

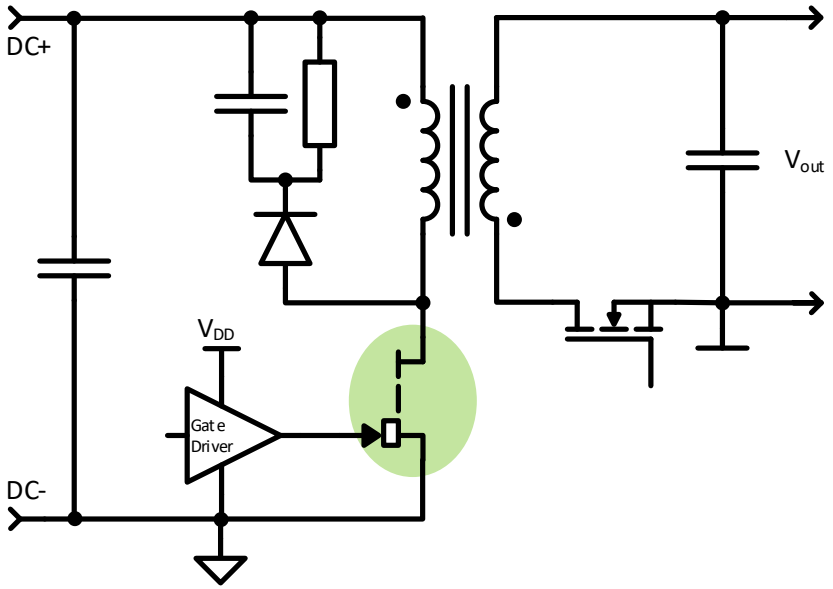

Simplified Schematic

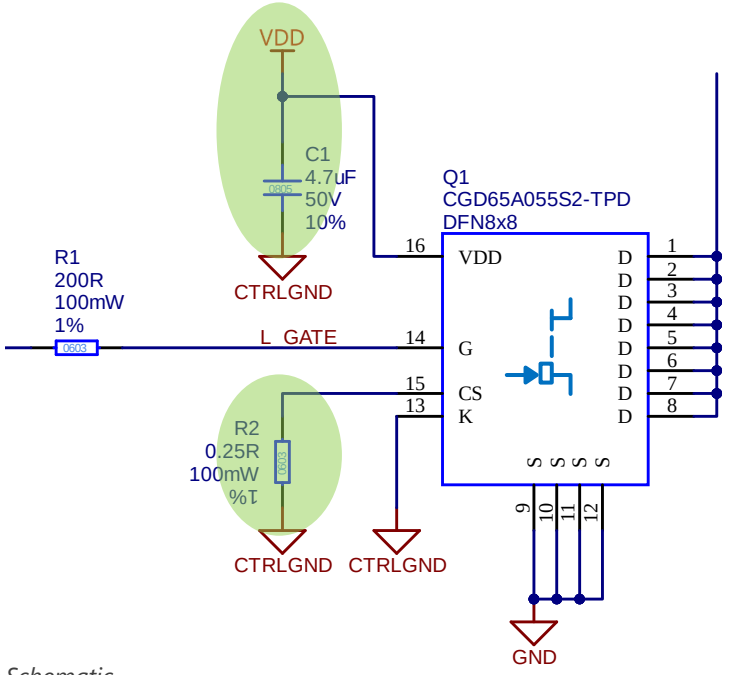

Extract from Design Schematic

To introduce ICeGaN to an existing Si/SiC design, simply add a V_{DD} connection from your existing driver/controller

© 2023 CGD

ICeGaN VDD & H2 NL^3

- ICeGaN™ requires an external V_{DD} and local decoupling
  - V_{DD} is used to power internal IC
  - V_{DD} operating range = 9 - 20 V DC
  - I_{DD} Operating = 800uA typ. (H2)
  - I_{DD} Quiescent = 100uA typ. (H2)
  - V_{DD} de-coupling Cap selection = 0.1u 50v MLCC

See Reference Design : CGD-ASYRFD003FA-02

H2 ICeGaN™ 65 W QR Flyback Reference Design

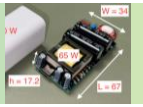

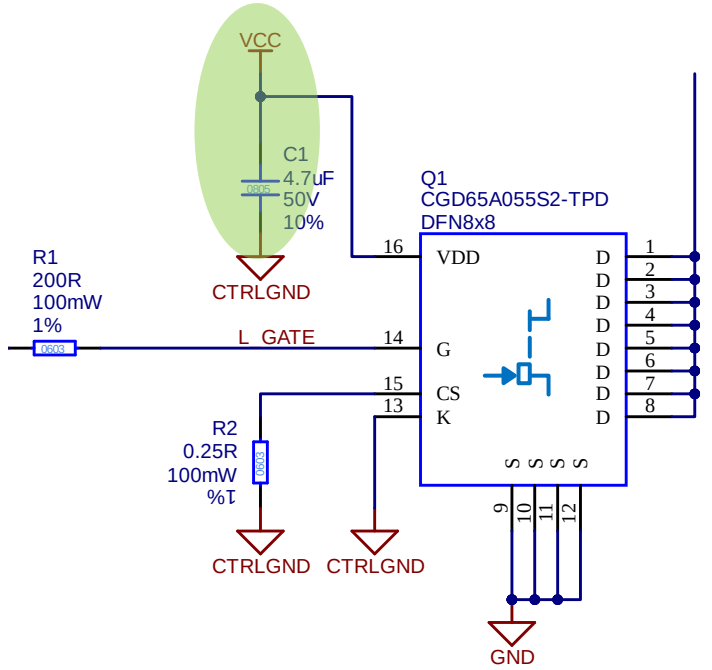

Extract from Design Schematic

H2 series (240 mOhm) datasheet

V_{DD} current (V_{GS} in on-state)	I_{VDD}	V_{GS} = 12 V, V_{DS} = 0 V		0.8	1.4	mA
V_{DD} current (V_{GS} in on-state)	I_{VDD}	T_J = 150 °C V_{GS} = 12 V, V_{DS} = 0 V		0.4		mA
V_{DD} current (V_{GS} in off-state)	I_{VDD}	V_{GS} = 0 V, V_{DS} = 0 V		100		µA
VV$_{DD}$ current (V_{GS} in off-state)	I_{VDD}	T_J = 150 °C V_{GS} = 0 V, V_{DS} = 0 V		50		µA

ICeGaN VDD has low quiescent current & a wide operating range so it can easily be used from an existing power rail

© 2023 CGD

ICeGaN™ Gate Control

See Evaluation Board : CGD-ASYEVB01601-01

H2 ICeGaN™ 240mΩ Half Bridge



- ICeGaN Gate Control is just like an N channel MOSFET
  - V_{GS} operating = 0-20 V DC
  - $V_{GS(th)}$ = 2.9 V typ.
  - $V_{GS(OFF)}$ = 0 V - Negative V_{GS} not required.
  - V_{DS} dV/dt controlled via R_{GATE} & V_{DD} selection

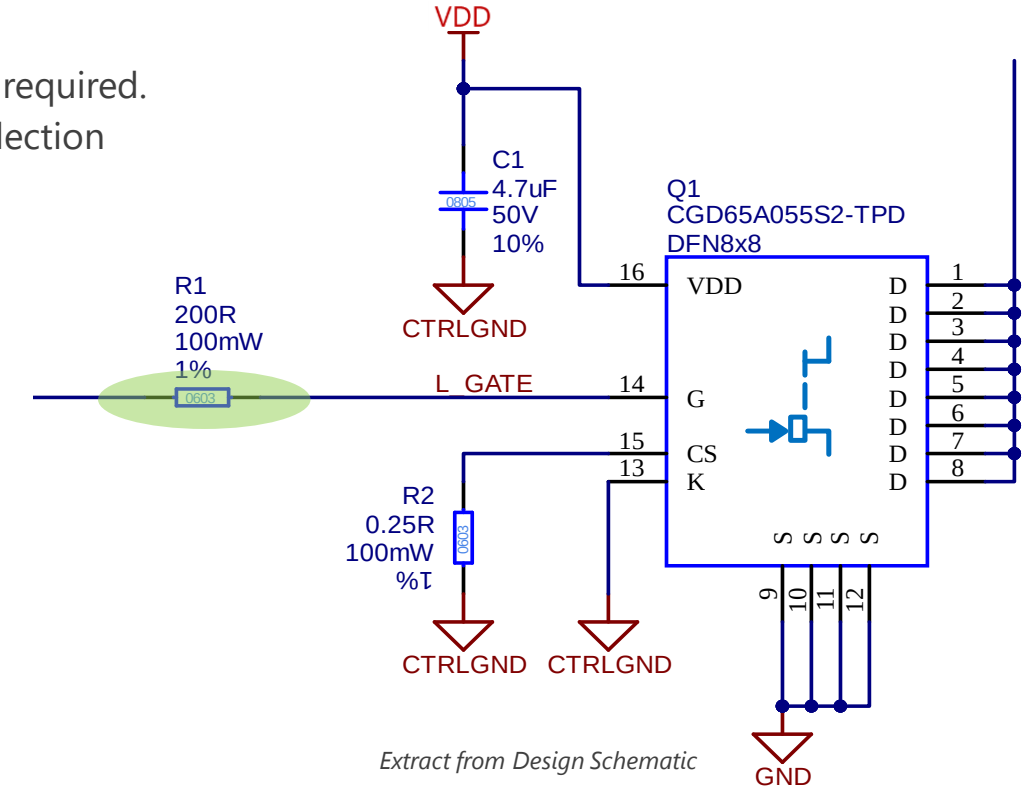

Extract from Design Schematic

ICeGaN Gate is driven just like a MOSFET

© 2023 CGD

ICeGaN™ Gate Control

Gate turn On in detail

1. **V_{GS}= 0 V** : As V_{GS} rises from the driver I_{GS} quickly charges ICeGaN internal circuit & $C_{GS(Inner)}$, so V_{GS} rises sharply

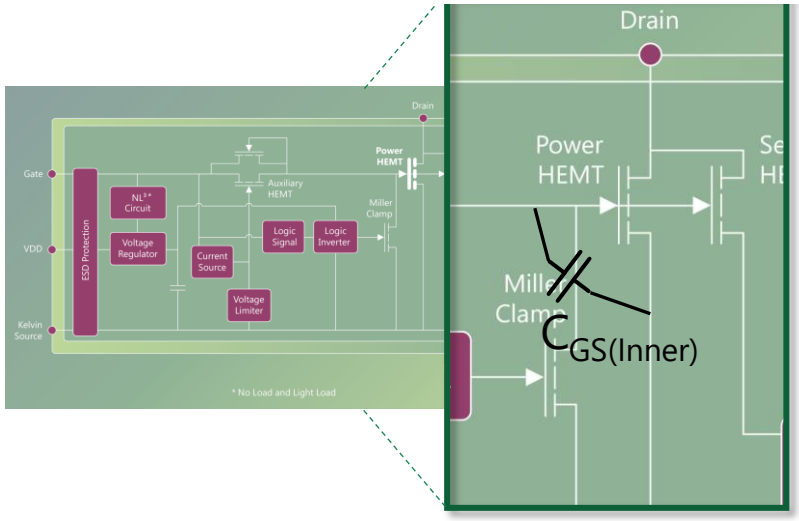

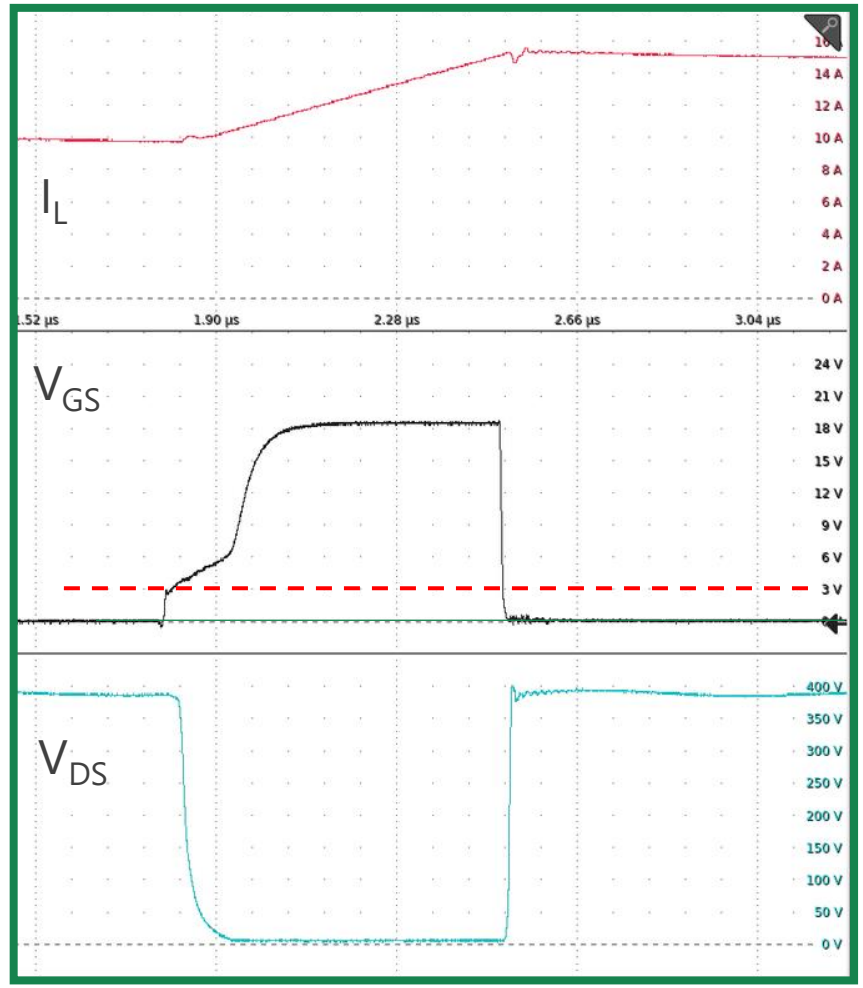

ICeGaN Gate is driven just like a MOSFET

Property of Cambridge GaN Devices Ltd
© 2023 CGD

ICeGaN™ Gate Control

Gate turn On in detail

1. **V_{GS}= 0 V** : As V_{GS} rises from the driver I_{GS} quickly charges ICeGaN internal circuit & $C_{GS(Inner)}$, so V_{GS} rises sharply

2. **V_{GS} => $V_{GS(th)}$** : V_{DS} starts to drop. ICeGAN internal circuit charges $C_{GS(Inner)}$ & discharges $C_{GD(Inner)}$. The discharging process is completed when V_{DS} = 0 V and V_{GS} >6 V.

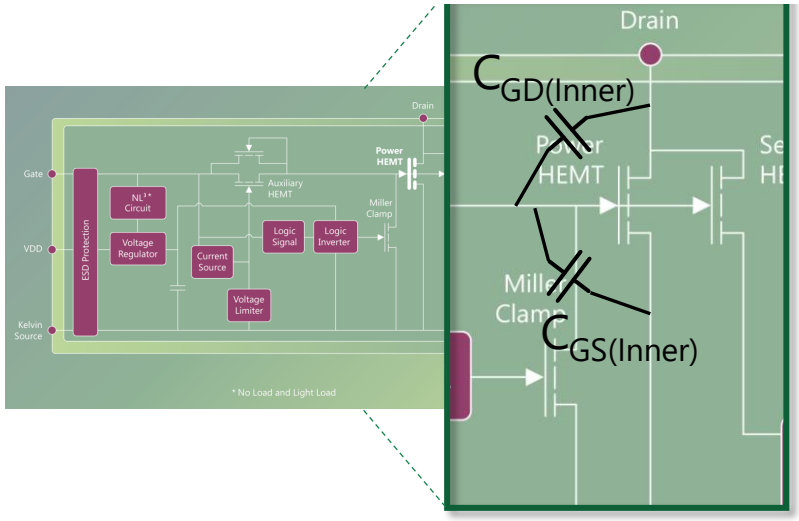

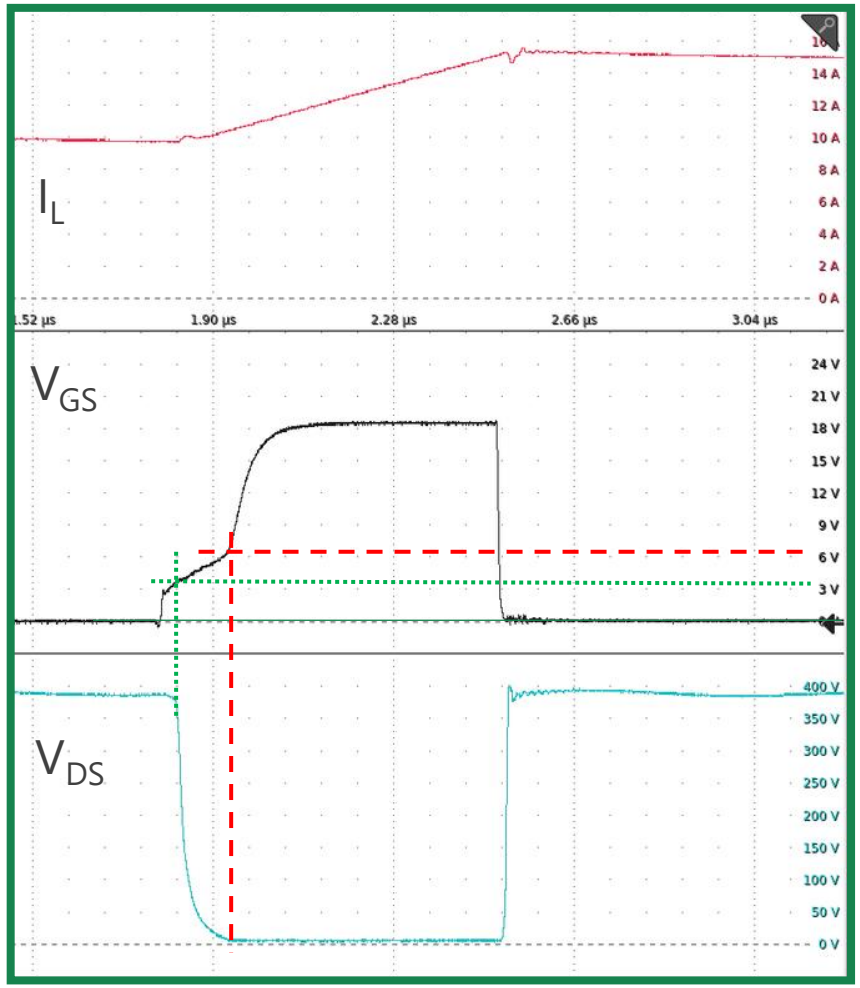

ICeGaN Gate is driven just like a MOSFET

Property of Cambridge GaN Devices Ltd
© 2023 CGD

ICeGaN™ Gate Control

Gate turn On in detail

1. **V_{GS}= 0 V** : As V_{GS} rises from the driver I_{GS} quickly charges ICeGaN internal circuit & $C_{GS(Inner)}$, so V_{GS} rises sharply

2. **V_{GS} => $V_{GS(th)}$** : V_{DS} starts to drop. ICeGAN internal circuit charges $C_{GS(Inner)}$ & discharges $C_{GD(Inner)}$. The discharging process is completed when V_{DS} = 0 V and V_{GS} >6 V.

3. **V_{GS} > 6 V** : I_{GS} charges $C_{GD(Inner)}$ //$C_{GS(Inner)}$ to ~6 V (clamped by internal circuit) and I_{GS} will continue to charge internal circuit to V_{GS} of the driver

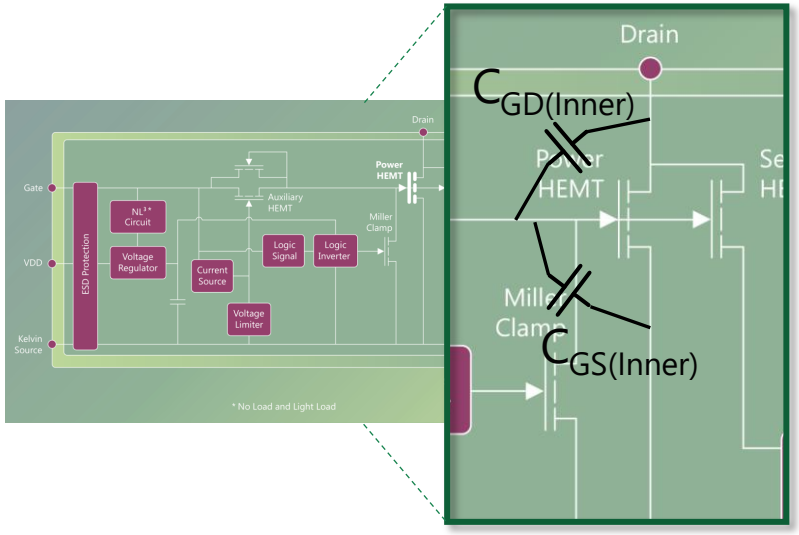

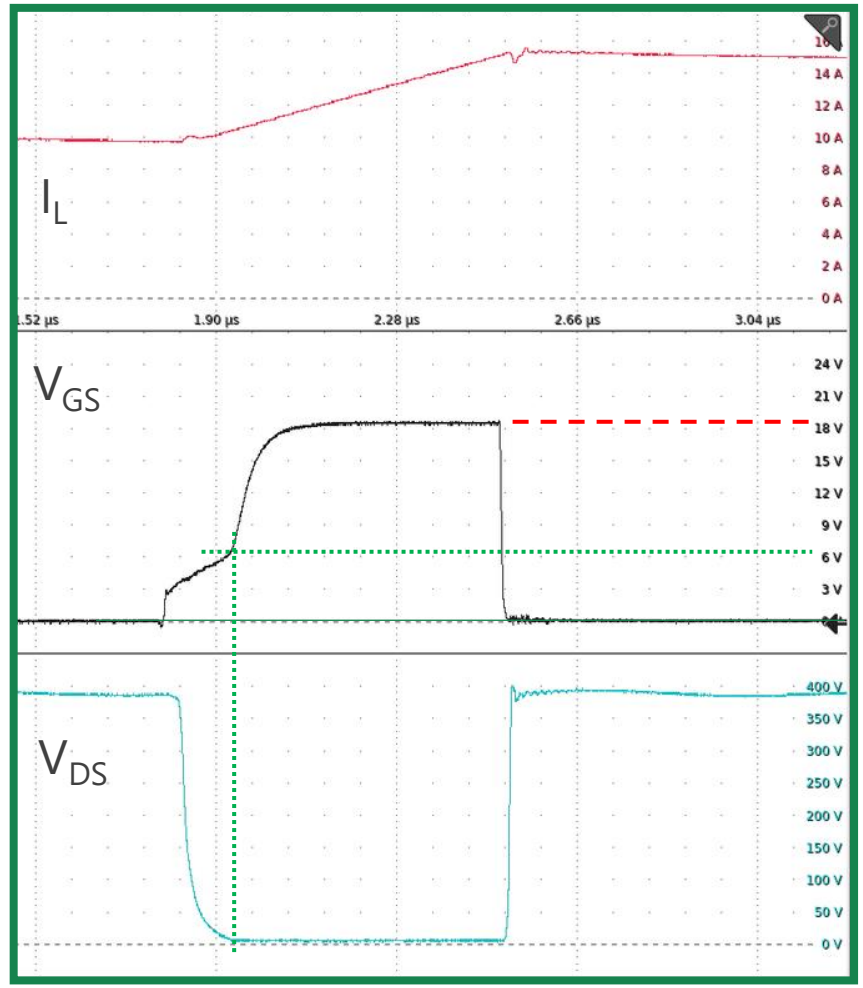

ICeGaN Gate is driven just like a MOSFET

Property of Cambridge GaN Devices Ltd
© 2023 CGD

ICeGaN™ Gate Control

Balance driving signal (current) to ICeGaN

$R_{G(ON)}$= **10** Ω, $V_{GK(peak)}$ = **9** V, I_L = **20** A

See Evaluation Board : CGD-ASYEVB00701-01

ICeGaN™ 55mΩ Half Bridge

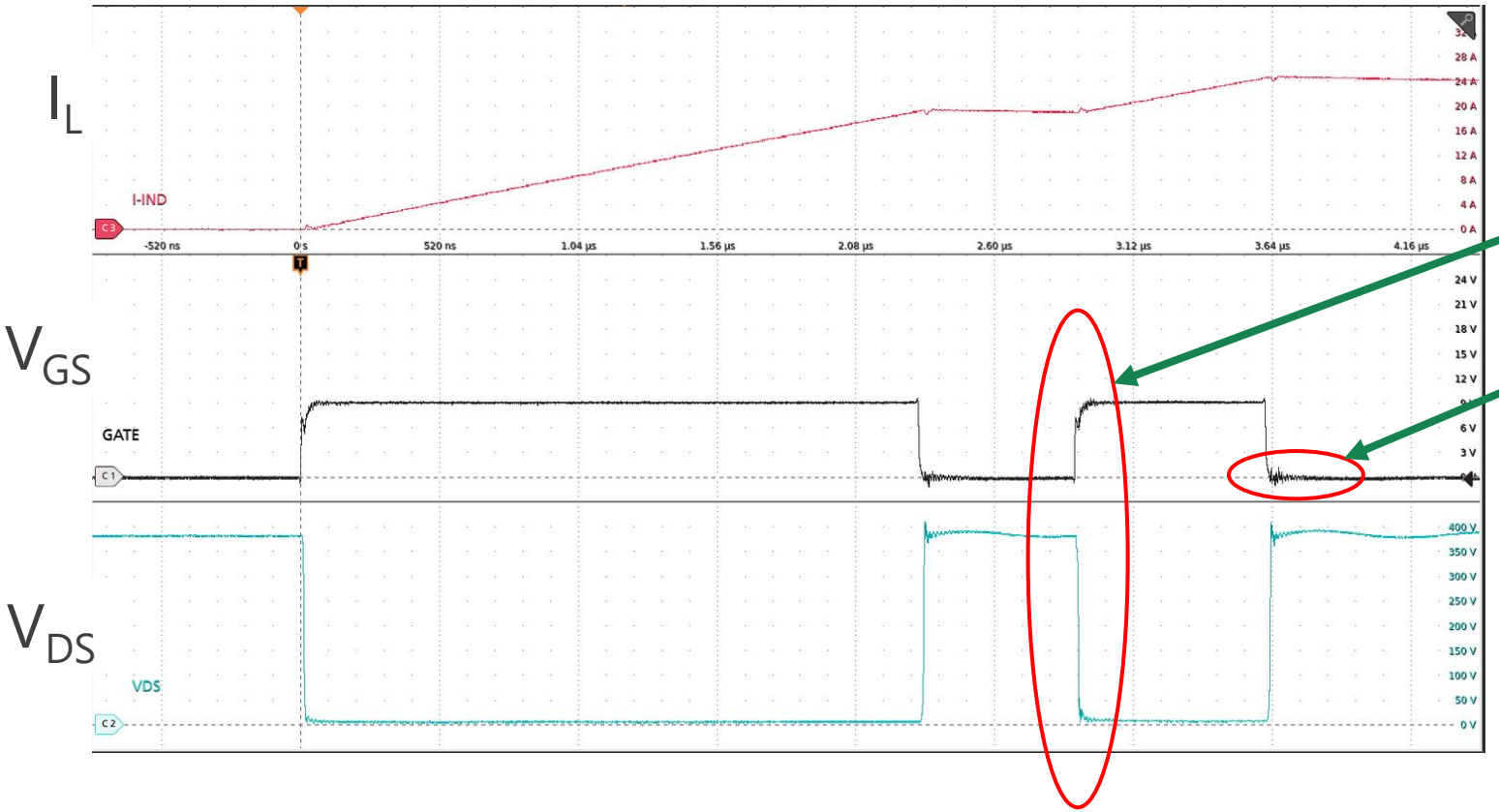

I_L

V_{GS}

V_{DS}

V_{GS} provides well controlled V_{DS} dV/dt

No false turn-On under high current switching (the noise is well below $V_{GS(th)}$)

ICeGaN provides well controlled High Voltage V_{DS} switching transition

Property of Cambridge GaN Devices Ltd

© 2023 CGD

ICeGaN™ Gate Control – Turn On dV/dt

See Evaluation Board : CGD-ASYEVB00701-01

ICeGaN™ 55mΩ Half Bridge



Test Case - CGD65A055S2, L= 47 uH, V_{DS}=380 V, I_L=10 A

V_{GKpeak} \ $R_{G(ON)}$	10 Ω	22 Ω	47 Ω	100 Ω	220 Ω	470 Ω
9 V	60 V/ns	39 V/ns	16 V/ns	8 V/ns	4 V/ns	2 V/ns
12 V	101 V/ns	60 V/ns	36 V/ns	13 V/ns	6 V/ns	3 V/ns
16 V	117 V/ns	105 V/ns	54 V/ns	26 V/ns	9 V/ns	4 V/ns
20 V	123 V/ns	118 V/ns	62 V/ns	37 V/ns	12 V/ns	6 V/ns

1/ V_{GS} =V_{DD}
2/ For indication only – driver selection will also influence final dv/dt performance

ICeGaN provides easy dV/dt control & large range of dV/dt adjustment

© 2023 CGD
Property of Cambridge GaN Devices Ltd

ICeGaN™ Gate Control dV/dt

Balance driving signal (current) to ICeGaN

$R_{G(ON)}$ = **10** Ω, $V_{GK(peak)}$ = **20** V, I_L = **20** A

See Evaluation Board : CGD-ASYEVB00701-01

ICeGaN™ 55mΩ Half Bridge



Voltage dip at turn on gate signal due to transient current C_{GD} (dV_{DS}/dt) sinking driver input current - strong driving current keeps the voltage dip far from $V_{GS(th)}$

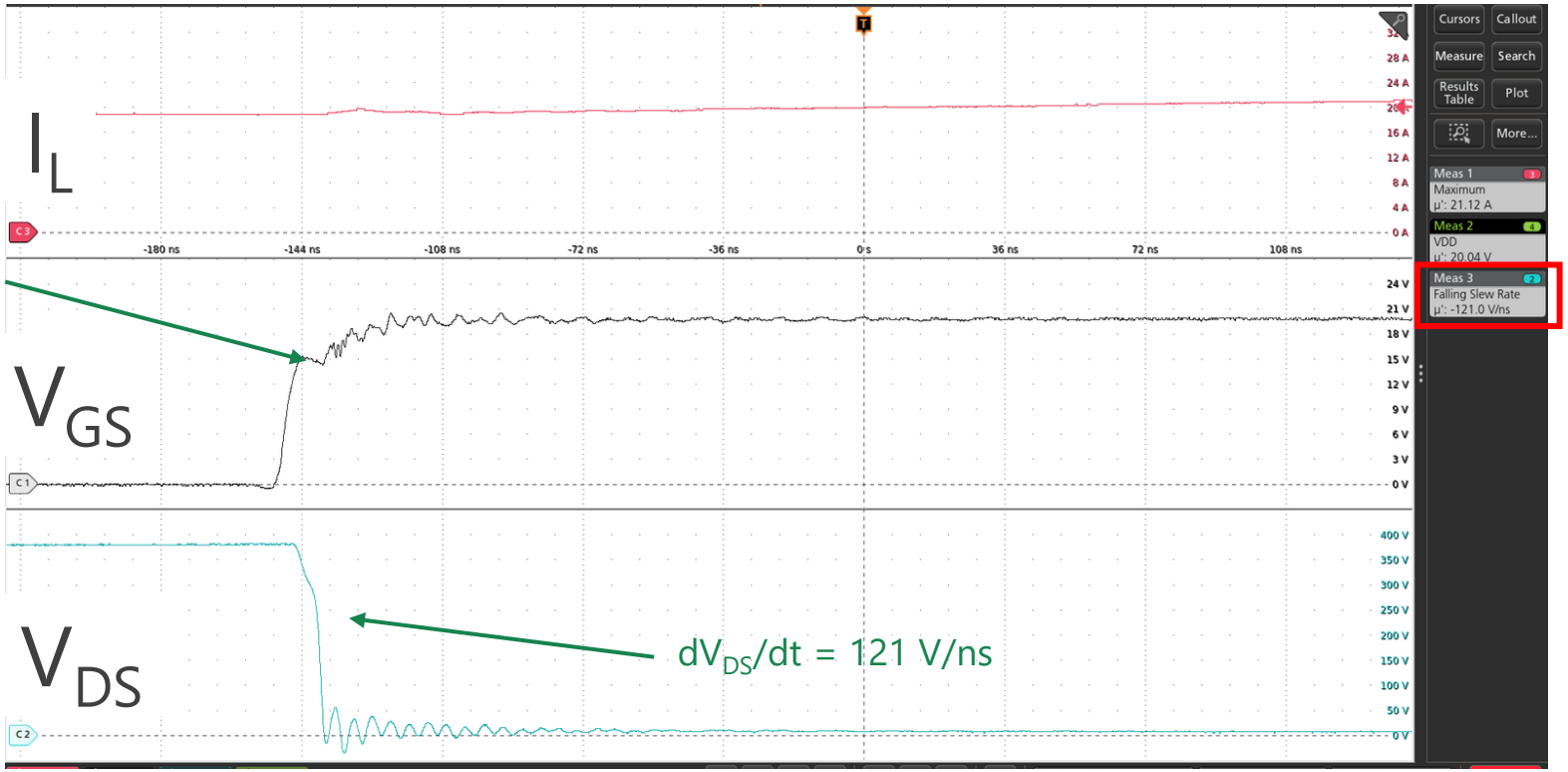

ICeGaN delivers very fast and well controlled HV Switching

© 2023 CGD

ICeGaN™ – Reverse conduction

- In many topologies switch devices will need to operate while reverse biased.
- ICeGaN Gate when device Drain-Source is reverse biased
  - When $V_{GS} > V_{GS(th)}$ ICeGaN operates in the ohmic region
  - **When $V_{GS} < V_{GS(th)}$ ICeGaN operates in pseudo body diode mode**
    - When the device 'effective V_F' is determined by the applied V_{GS}

See Evaluation Board : CGD-ASYEVB012FA-02

ICeGaN™ 350 W TP-PFC with H2

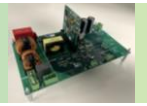

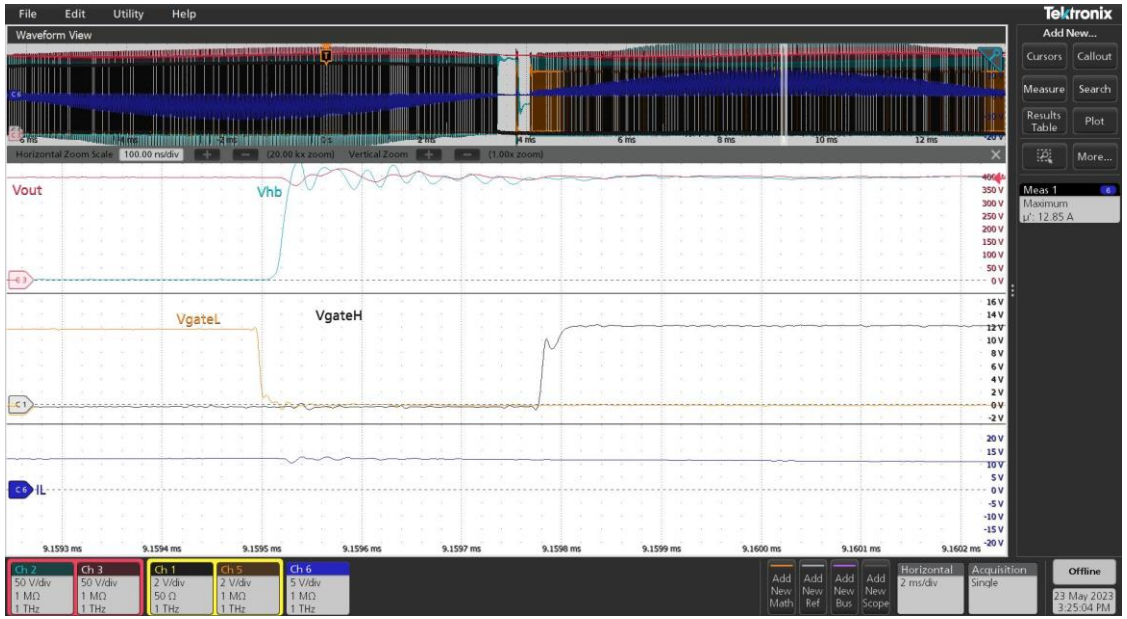

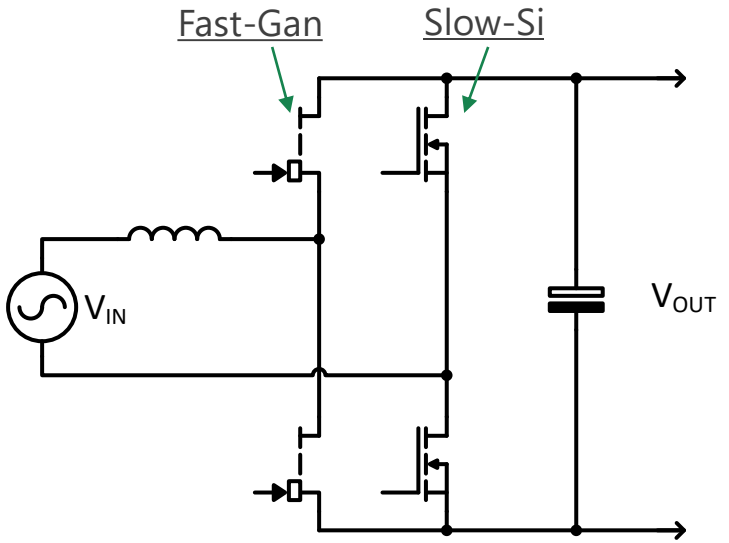

Totem-Pole PFC Topology

When ICeGaN is OFF & reverse biased it is in pseudo body diode mode hence V_{GS} determines device power dissipation

© 2023 CGD

eMode GaN – Reverse conduction

- eMode GaN Gate will have a negative V_{GS} to avoid false turn-ON so V_{GS} = -3v typ.
  - For e-mode GaN HEMTs in Application, the dead-time loss occurs when the device operates in third quadrant (V_{GS} < $V_{GS(th)}$)

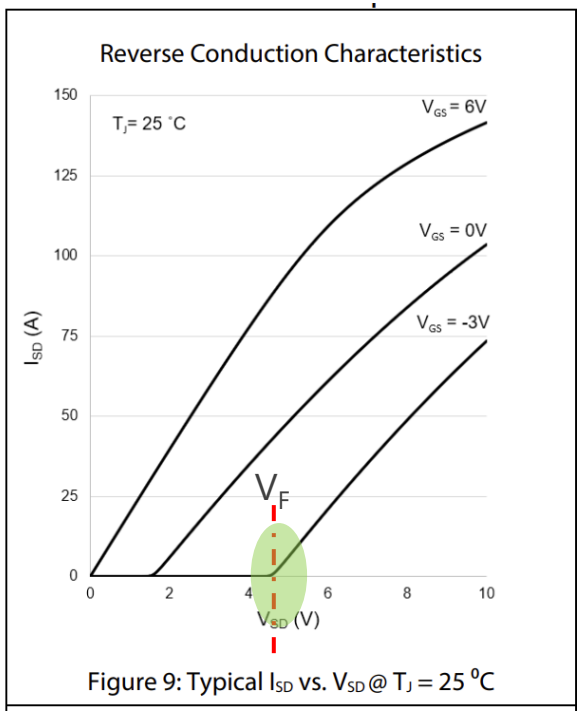

Figure 9: Typical I_{SD} vs. V_{SD} @ T_J = 25 °C

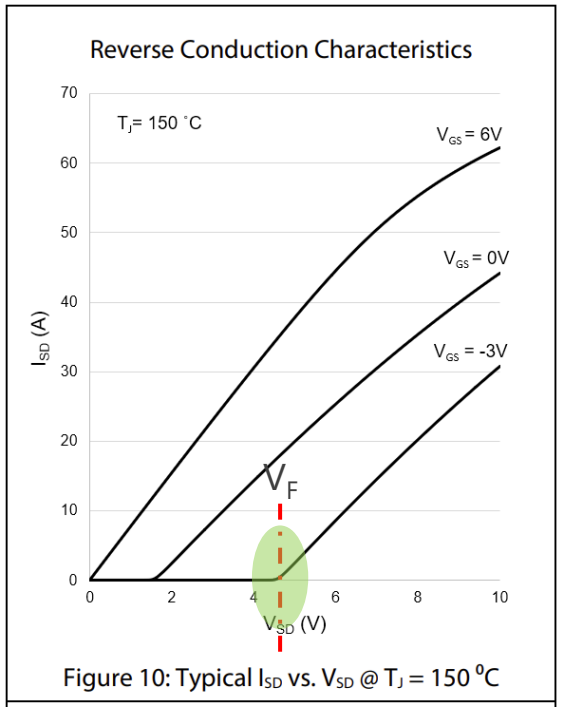

Figure 10: Typical I_{SD} vs. V_{SD} @ T_J = 150 °C

Extract from Device datasheet 04/2023 - Reference provided upon request

$$P_{DT} = 2 \times V_F \times I_O \times t_{dead_time} \times f_{SW} \ (\mathrm{W})$$

t_{dead_time} : Dead time
Io : Load Current
V_F : Low-side MOSFET body diode forward voltage
fsw : Operating frequency

Circuit parameters	
V_{ac} (V)	90
P_{out} (W)	350
I_L (A)	3.5
T_d (ns)	200
f_{sw} (kHz)	80

Comparison	
	eMode GaN
$V_{GS\text{-}off}$ (V)	-3
V_{fw} (V)	4.7
P_{dead} (mW)	526.4

The V_F of Conventional eMode GaN Psuedo Body Diode Mode is ~4.7 V

© 2023 CGD

ICeGaN™ – Reverse conduction

- ICeGaN Gate does not require a negative gate voltage to avoid false turn-ON so V_{GS} = 0v
  - For e-mode GaN HEMTs in Application, the dead-time loss occurs when the device operates in third quadrant (V_{GS} < $V_{GS(th)}$)

$$P_{DT} = 2 \times V_F \times I_O \times t_{dead_time} \times f_{SW} \ (W)$$

t_{dead_time} : Dead time
Io : Load Current
V_F : Low-side MOSFET body diode forward voltage
fsw : Operating frequency

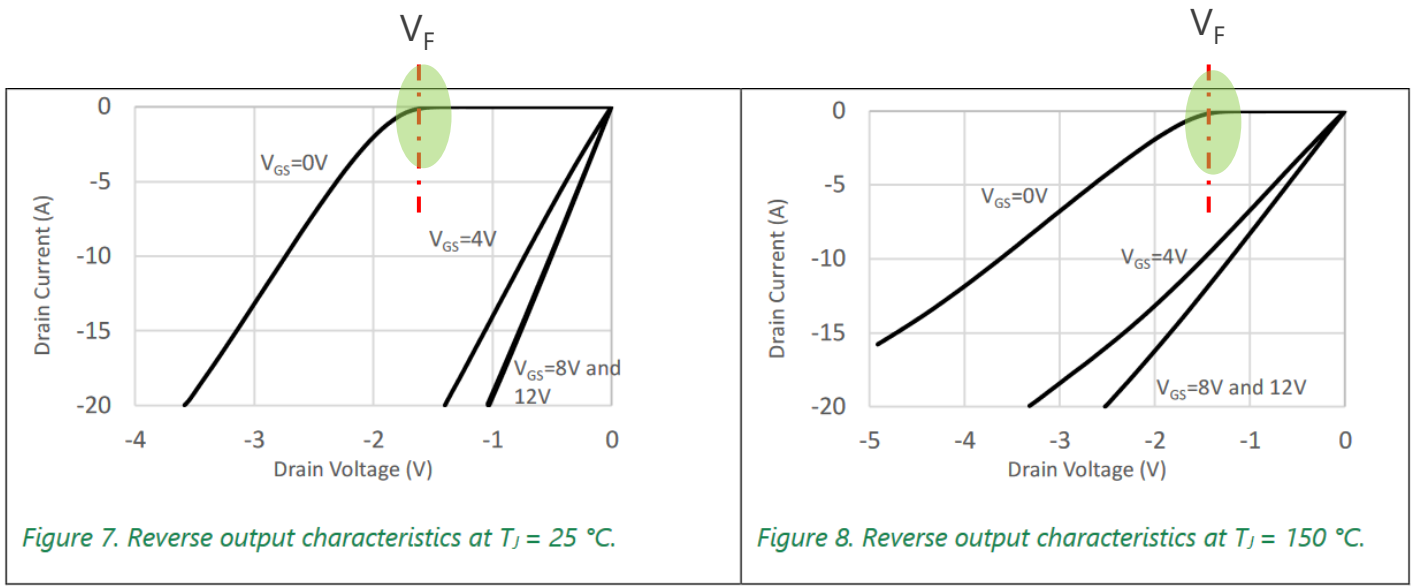

Figure 7. Reverse output characteristics at T_J = 25 °C.

Figure 8. Reverse output characteristics at T_J = 150 °C.

Extract from ICeGaN Datasheet

Circuit parameters	
V_{ac} (V)	90
P_{out} (W)	350
I_L (A)	3.5
T_d (ns)	200
f_{sw} (kHz)	80

Comparison	eMode GaN	ICeGaN
$V_{GS\text{-}off}$ (V)	-3	0
V_{fw} (V)	4.7	1.8
P_{dead} (mW)	526.4	201.6
Δ power saving (mW)		324.8

In reverse conduction ICeGaN V_F is ~1.7 V – Hence reducing dead-time losses by ~324mW

© 2023 CGD

ICeGaN™ Current-Sense

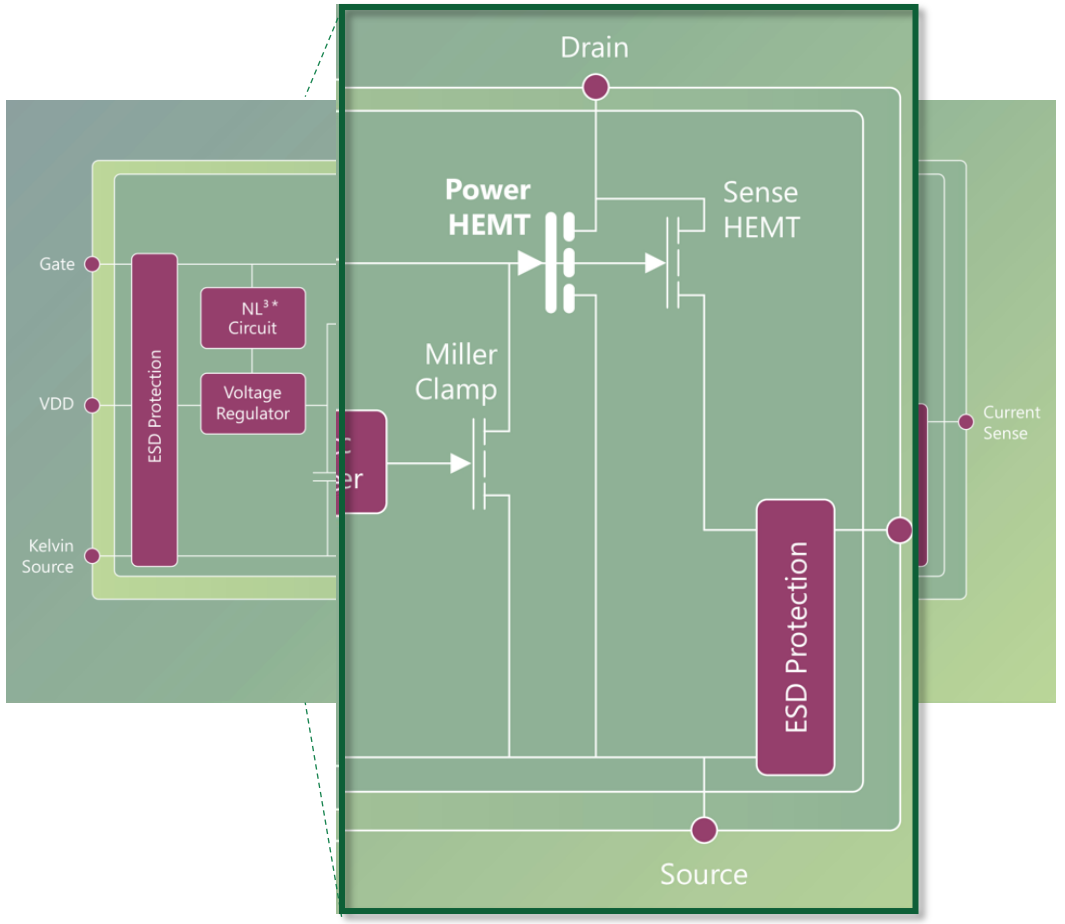

- ICeGaN Current Sense provides an output current I_{CS} that is proportional to I_D
- The Current Sense feature uses a monolithically integrated sense-HEMT that is closely matched to the Power HEMT.

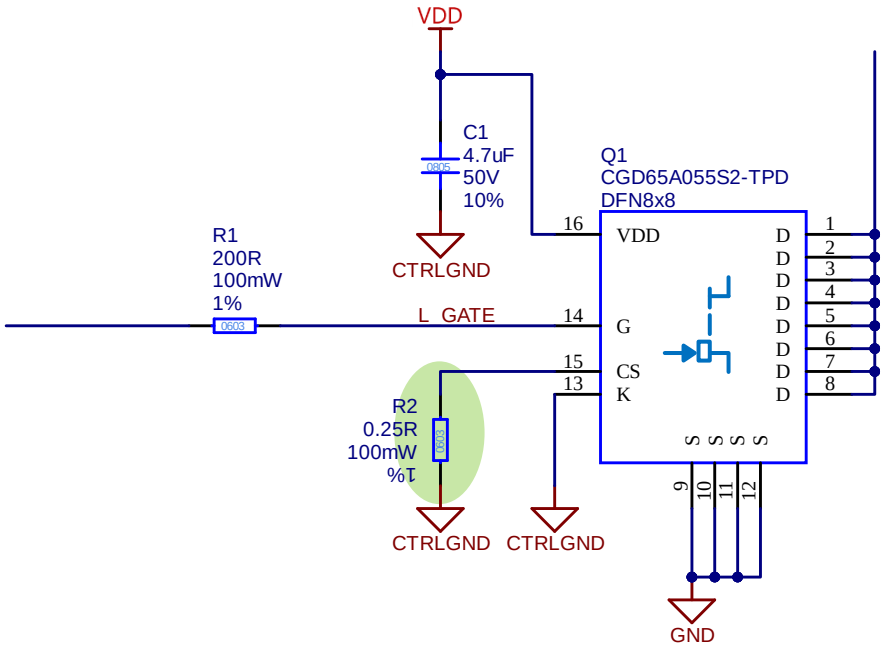

ICeGaN provides an easy to use current sense feature.

© 2023 CGD

ICeGaN™ Current-Sense

- Current Sense output provides an output current I_{CS} that is proportional to I_D
  - 55mΩ ICeGaN = 2.2 mA/A
  - 130mΩ ICeGaN =11.8 mA/A
  - 200mΩ ICeGaN =16.7 mA/A
  - 240mΩ ICeGaN = 20.6 mA/A
- Choose suitable R_{CS} to adjust sensitivity mV/A (Id)

$$V_{CS} = R_{CS} I_{CS}$$

  - V_{CS} maximum is limited to 1.5 V
  - Example : An R_{CS} 1.8 Ω provides tolerance +/- 9% and CS sensitivity K_{CS} = 27 mV/A

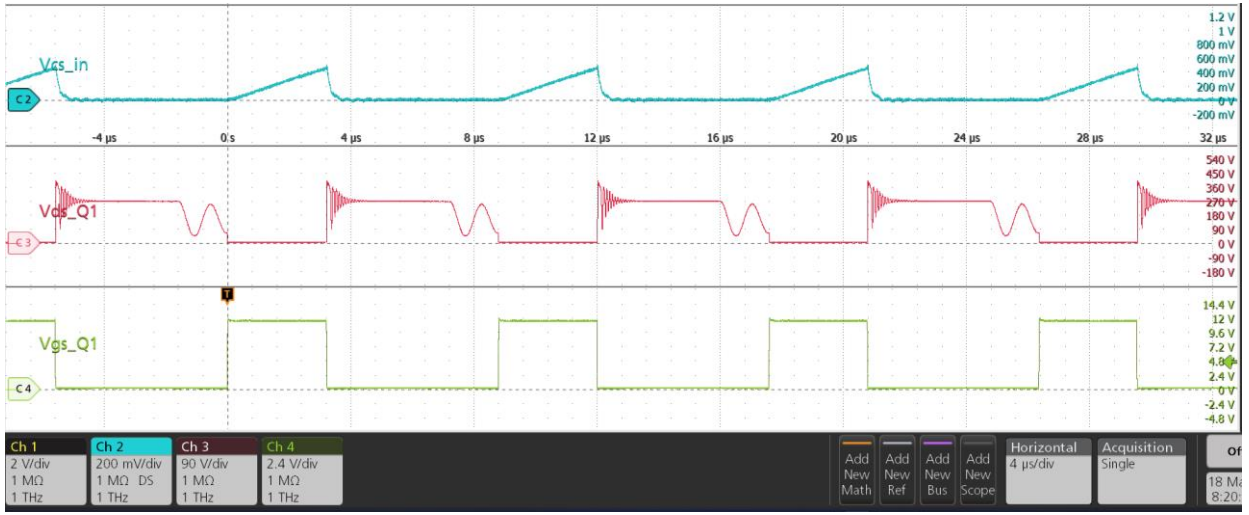

See Evaluation Board : CGD-ASYEVB00201-05

H2 ICeGaN™ 65 W QR Flyback



I_{CS} and a set resistor (R_{CS}) are used to generate a voltage (V_{CS}) proportional to I_D

© 2023 CGD

ICeGaN™ Current-Sense

- Simplified QR Flyback Application circuit
- An additional benefit of ICeGaN current sense is that it reduces the operating temperature of the GaN device by allowing removal of the lossy current sense resistor

See Evaluation Board : CGD-ASYEVB00201-05

H2 ICeGaN™ 65 W QR Flyback



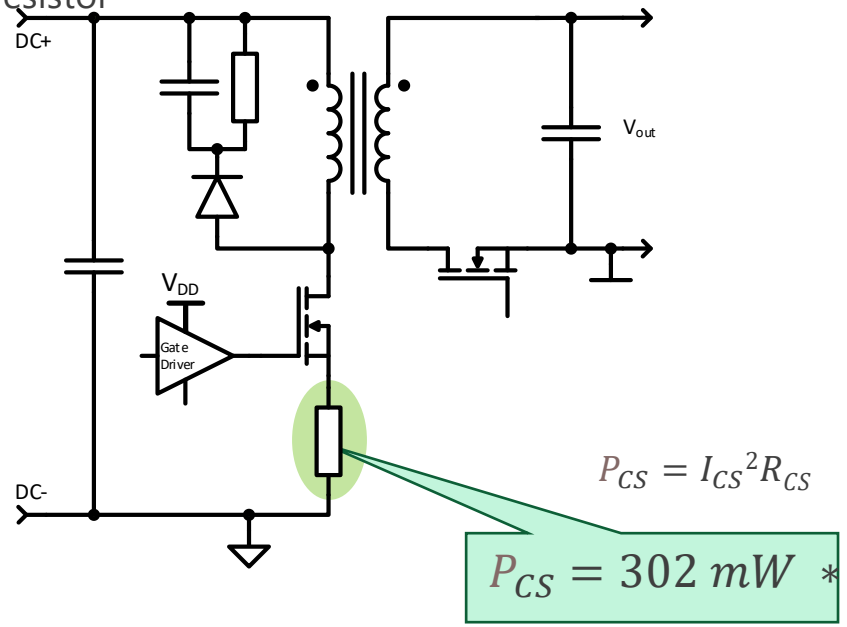

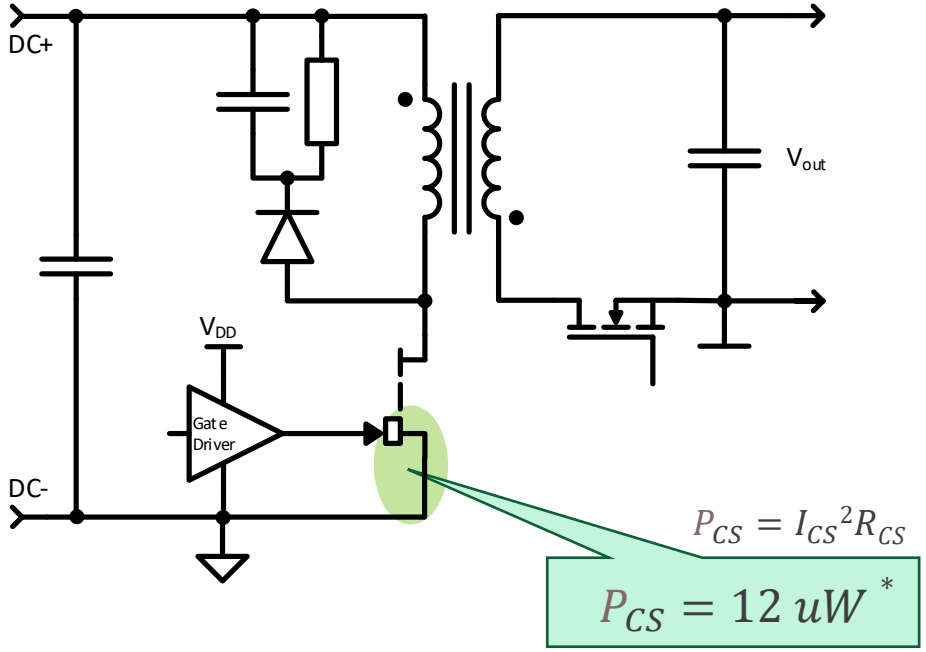

* 65W QRF uses 240mΩ ICeGaN – I_D 1.1$A_{(AVG)}$ – $R_{CS(Traditional)}$ 250m Ω, $R_{CS(ICeGaN)}$ 1.8 Ω

ICeGaN current sense can significantly reduce power dissipation in the current sense element

© 2023 CGD

ICeGaN™ Current-Sense

- Simplified QR Flyback Application circuit
- A further benefit of ICeGaN current sense is that it enables significant reduction of its thermal resistance

See Reference Design : CGD-ASYRFD003FA-02

H2 ICeGaN™ 65 W QR Flyback

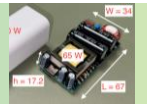

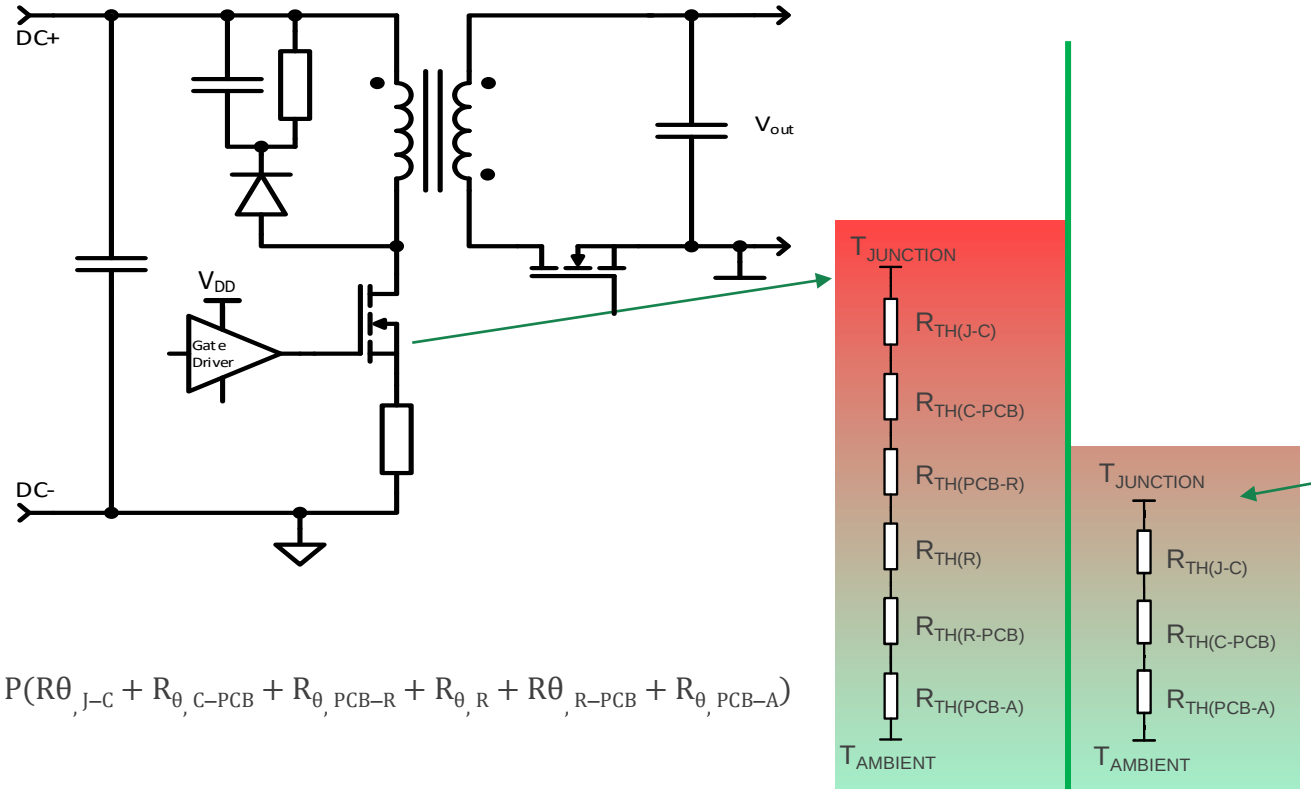

$$T_j = P(R\theta_{,J-C} + R_{\theta,C-PCB} + R_{\theta,PCB-R} + R_{\theta,R} + R\theta_{,R-PCB} + R_{\theta,PCB-A})$$

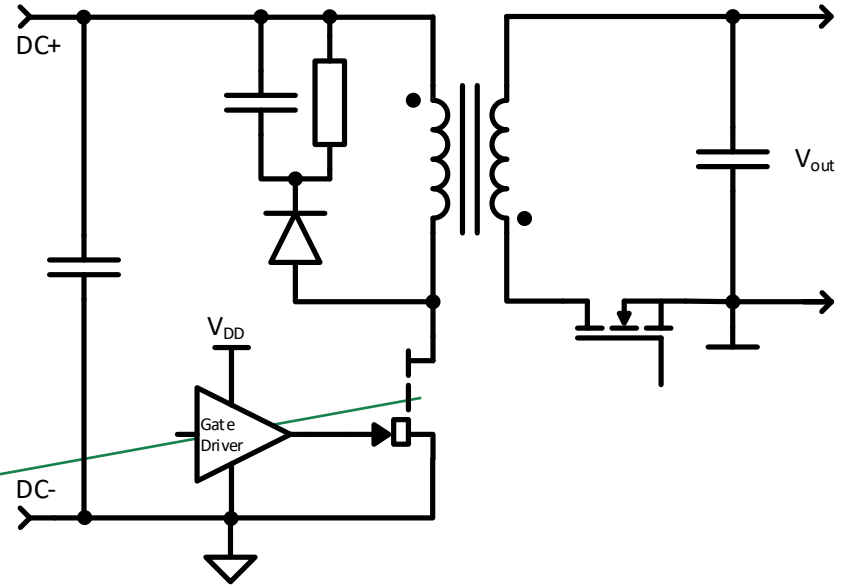

$$T_j = P(R\theta_{,J-C} + R_{\theta,C-PCB} + R_{\theta,PCB-A})$$

ICeGaN current sense enables reduced device operating temperature and improved reliability.

© 2023 CGD

dV/dt IMMUNITY AND THE ICeGaN™ MILLER CLAMP

dV/dt Immunity and the ICeGaN™ Miller Clamp

- GaN switching is very fast ~10nS & can naturally develop large dV/dt transients.
- In the Half Bridge Topology shown, a switch HS device can easily impact the gate of the LS Device

See Evaluation Board : CGD-ASYEVB00701-01

ICeGaN™ 55mΩ Half Bridge

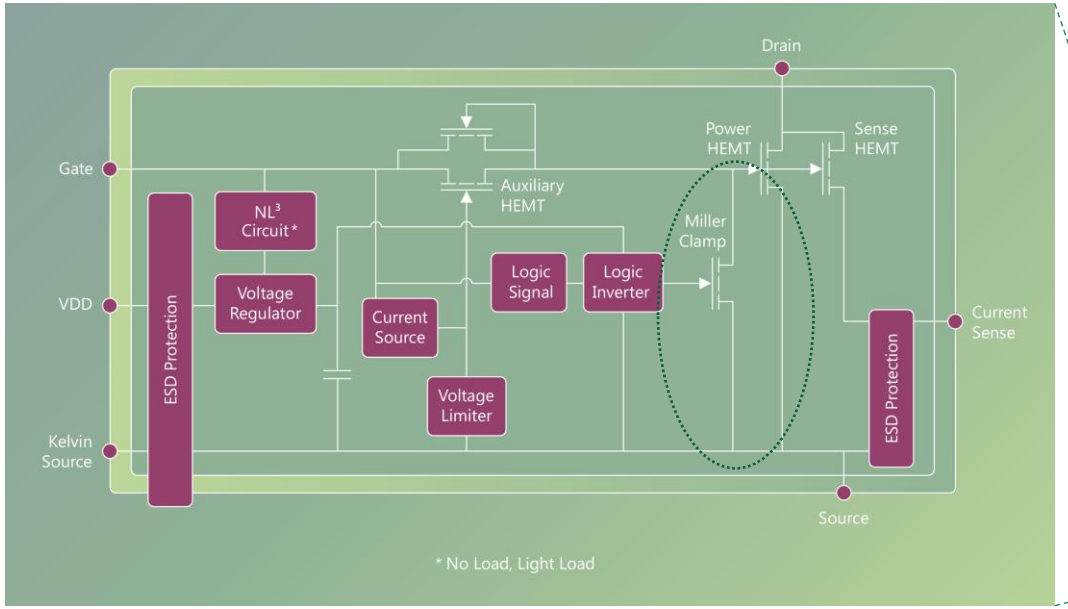

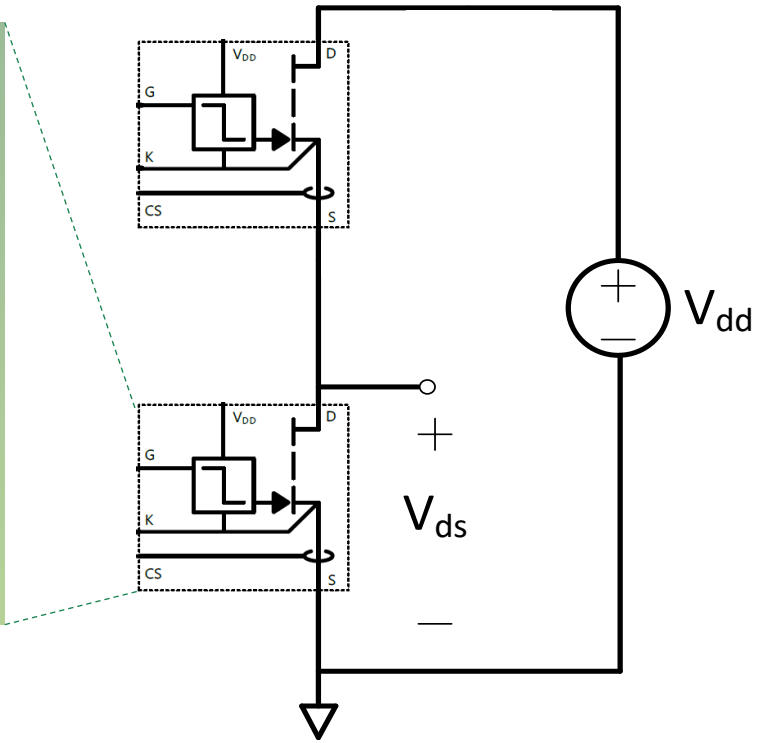

ICeGaN Miller Clamp is monolithically integrated to provide a low loop impedance Power HEMT V_{GS} clamp

© 2023 CGD

dV/dt Immunity and the ICeGaN™ Miller Clamp

- GaN switching is very fast ~10nS & can naturally develop large dV/dt transients.
- In the Half Bridge Topology shown, a switch HS device can easily impact the gate of the LS Device

See Evaluation Board : CGD-ASYEVB00701-01

ICeGaN™ 55mΩ Half Bridge

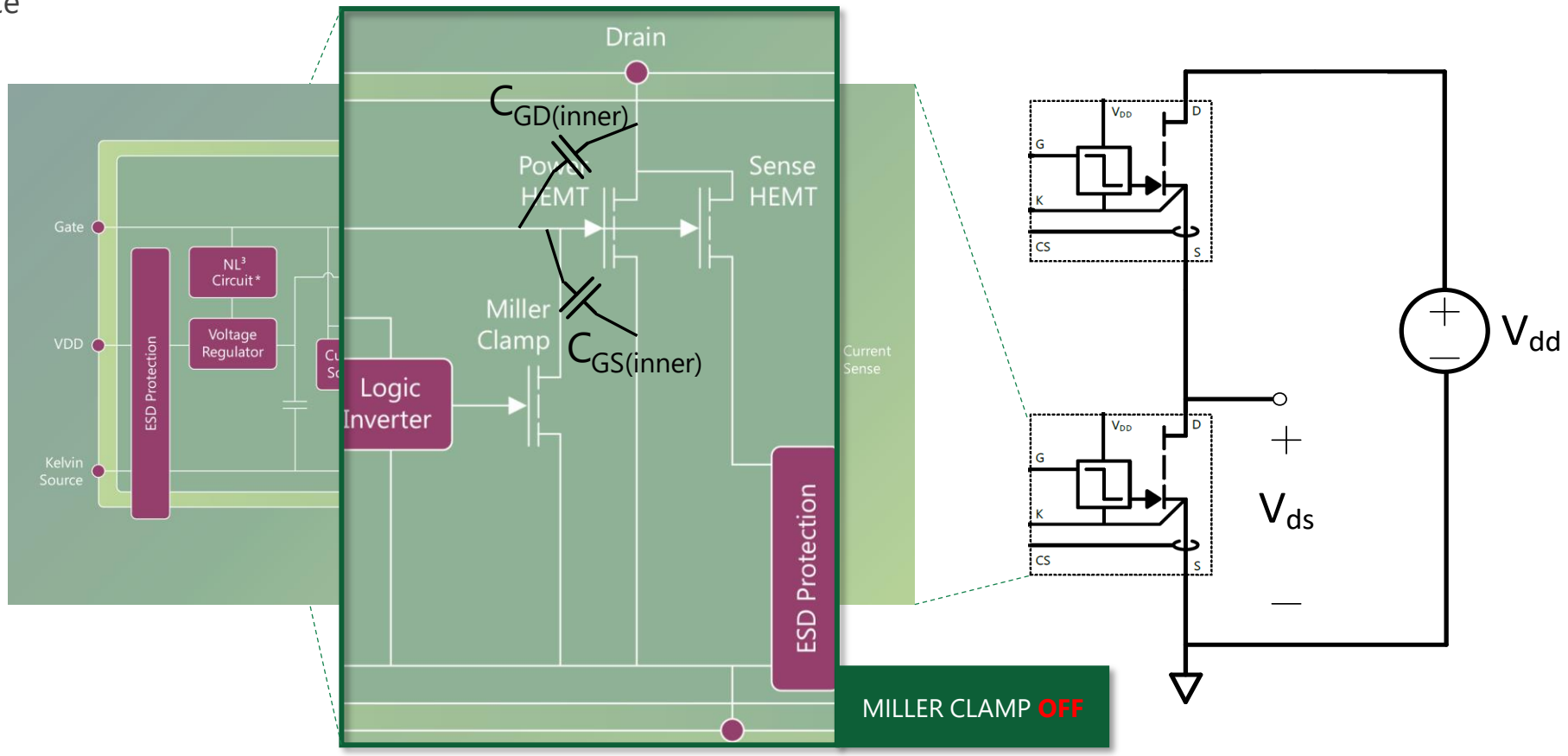

ICeGaN Miller Clamp is monolithically integrated to provide a low loop impedance Power HEMT V_{GS} clamp

© 2023 CGD

dV/dt Immunity and the ICeGaN™ Miller Clamp

- GaN switching is very fast ~10nS & can naturally develop large dV/dt transients.
- In the Half Bridge Topology shown, a switch HS device can easily impact the gate of the LS Device

See Evaluation Board : CGD-ASYEVB00701-01

ICeGaN™ 55mΩ Half Bridge

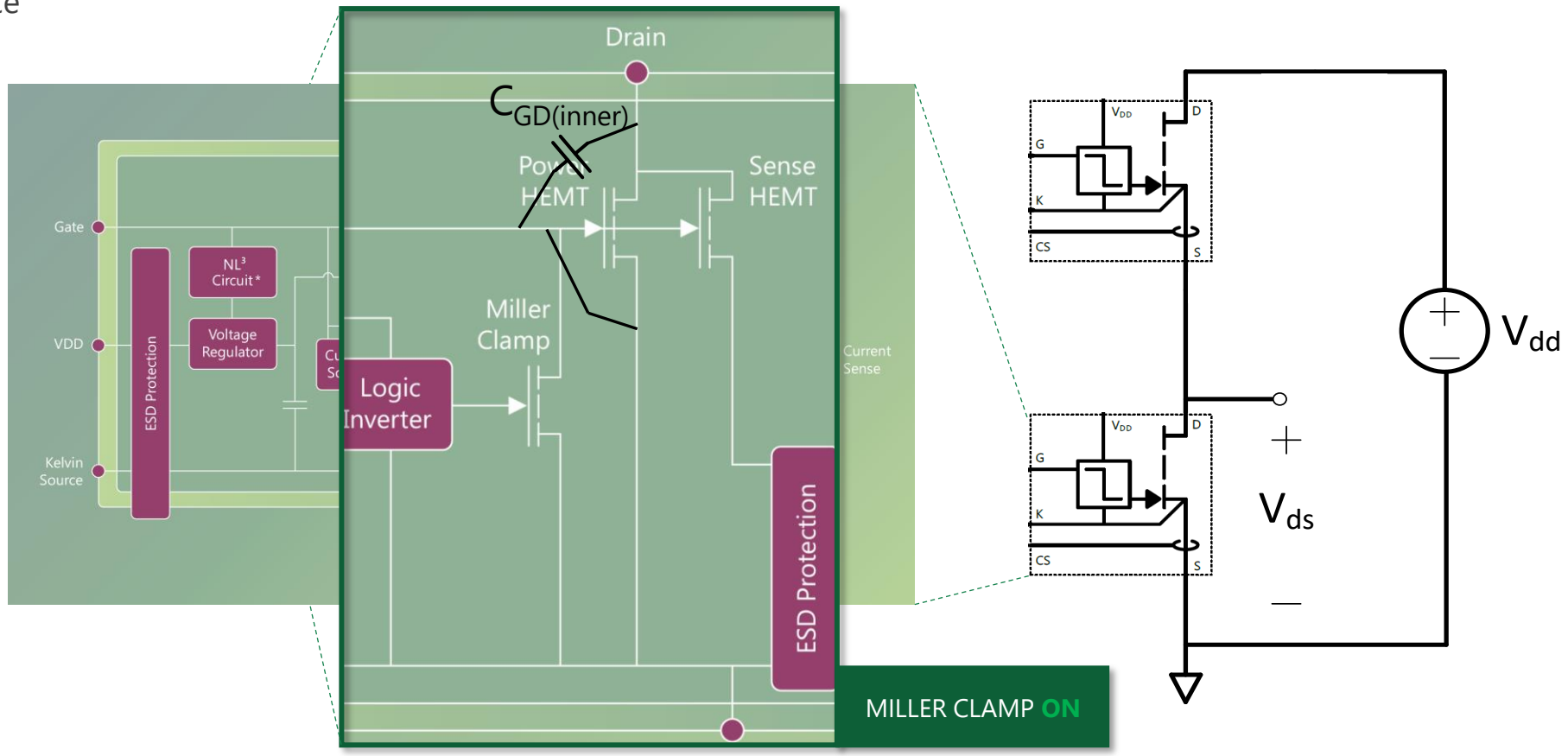

ICeGaN Miller Clamp is monolithically integrated to provide a low loop impedance Power HEMT V_{GS} clamp

Property of Cambridge GaN Devices Ltd

© 2023 CGD

dV/dt Immunity and the ICeGaN™ Miller Clamp

- The effectiveness of the ICeGaN miller clamp circuit is demonstrated by two test circuits in a Half-Bridge topology – One with Conventional eMode GaN, One with ICeGaN.
- This test varies HS device switching dV/dt from 2 to 130V/ns while LS device is held-Off with a 2R pull-down.

Test Circuit 1
eMode GaN

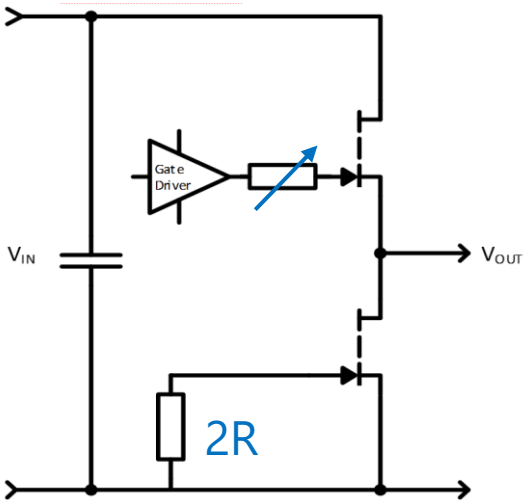

Test Circuit 2
ICeGaN™

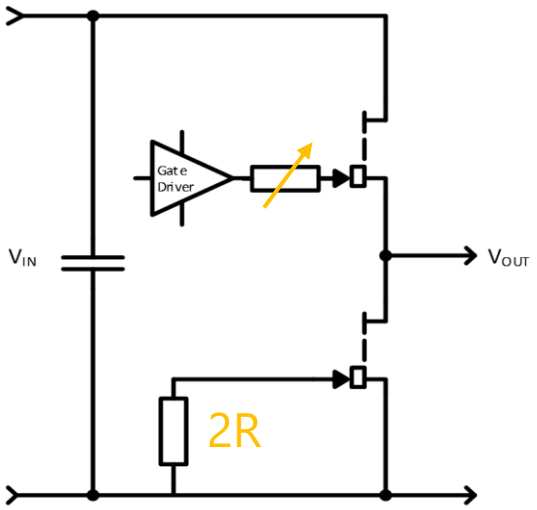

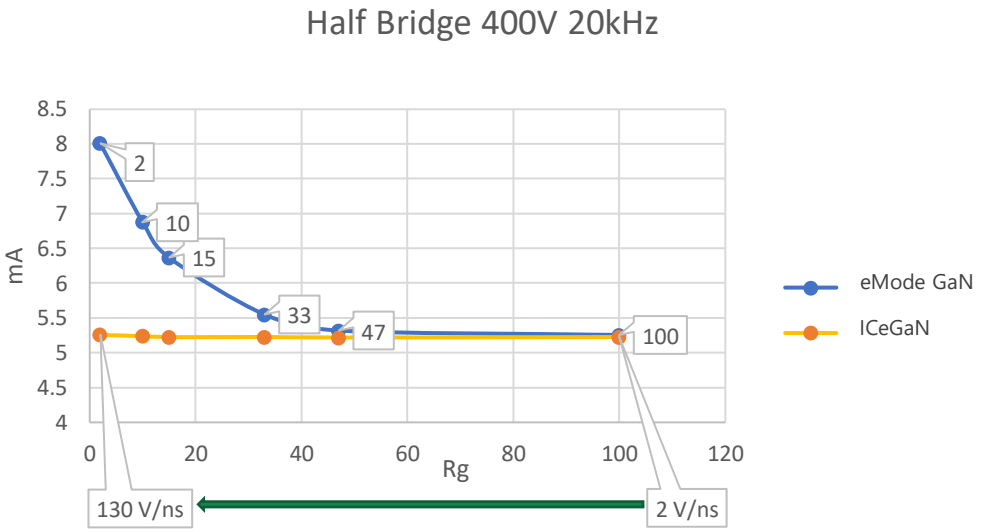

ICeGaN Miller Clamp provides optimum safety against false turn-ON – significantly reducing risk of increased power consumption or damage caused by shoot-through

Property of Cambridge GaN Devices Ltd
© 2023 CGD

In Summary

- We introduced the main building blocks of ICeGaN™ technology
- Demonstrate the ease with which existing Si/SiC devices can be replaced with ICeGaN
- Introduced the new H2 ICeGaN NL^3 circuit and the device's extremely low quiescent current.
- Explained how to power & control ICeGaN in your design.
- Reviewed how GaN devices operate in the third quadrant and how ICeGaN reduces power consumption during the switching dead-time.
- Introduced ICeGaN current sense, how to use and how implementing in your design can also reduce power consumption and device operating temperature.
- Finally we reviewed the ICeGaN Miller Clamp feature, how this improves device robustness against false turn-on and reduces risk of device shoot-through.

Many thanks for your time

Property of Cambridge GaN Devices Ltd

© 2023 CGD

CGD Supports Customers Throughout Their design-in

A Solution for Each Step

PURPOSE:
INITIAL DEVICE CHARACTERIZATION

Samples: Available at the factory or through CGDs distributors



DFN8x8

55mΩ & 130mΩ
650V



DFN5x6

130mΩ, 200mΩ & 240mΩ
650V

PURPOSE:
FUNCTIONAL TESTS in existing PCBs *(not efficiency optimized)*

Application Interface Boards (AIB) : Convert all popular Si and GaN footprints to use ICeGaN™ on existing PCBs

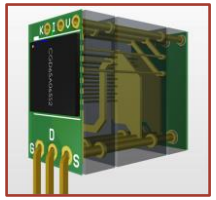

AIB concept:
CGD's GaN on competitor's footprint

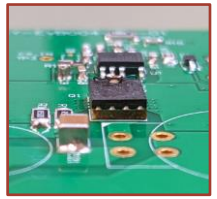

AIB mounted on a recipient PCB

AIB UserGuide: CGD-UG 2201

PURPOSE:
CUSTOMISED PCBs for highest efficiency and/or high frequency

Design Tips and Support Material:

- Evaluation Boards (12)
- Reference Designs (2)
- Application Notes (4)
- White Papers (5)
- User Guides (4)
- info@camgandevices.com

© 2023 CGD

Property of Cambridge GaN Devices Ltd



CGD™
CAMBRIDGE GaN DEVICES

Stay tuned with us!